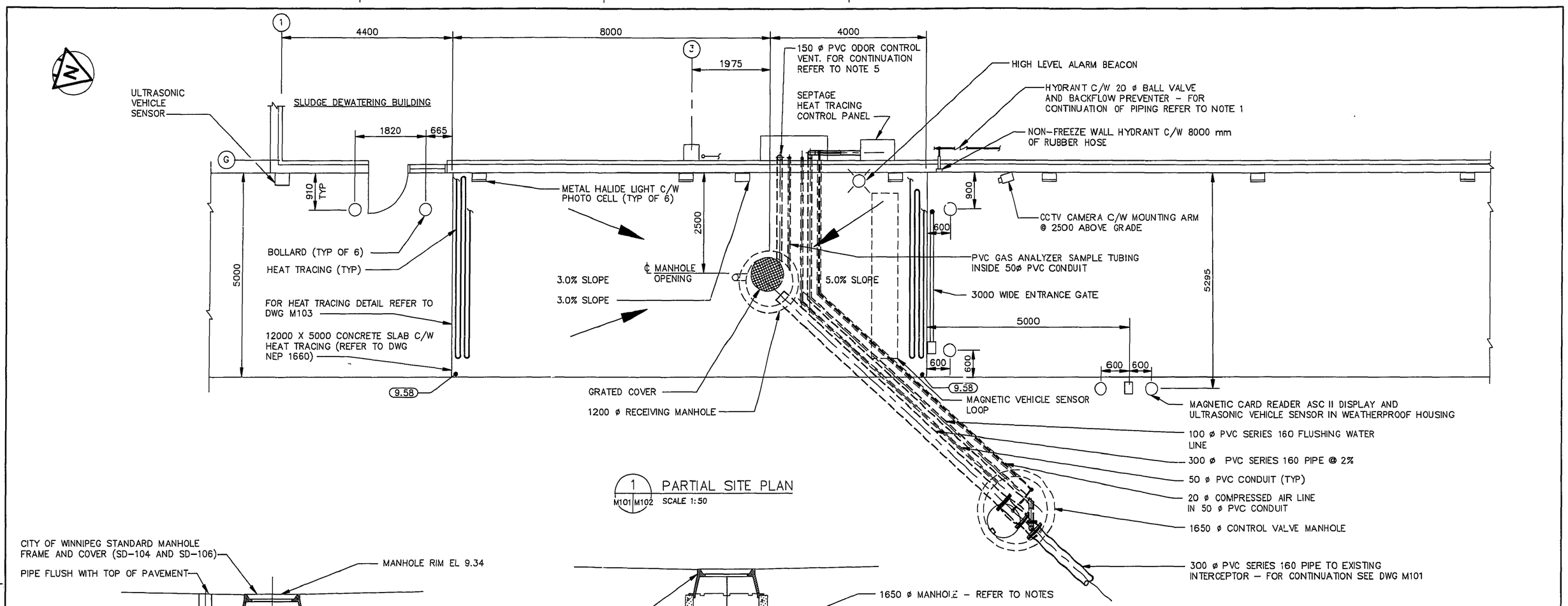

1 M101 M102 PARTIAL SITE PLAN
SCALE 1:50

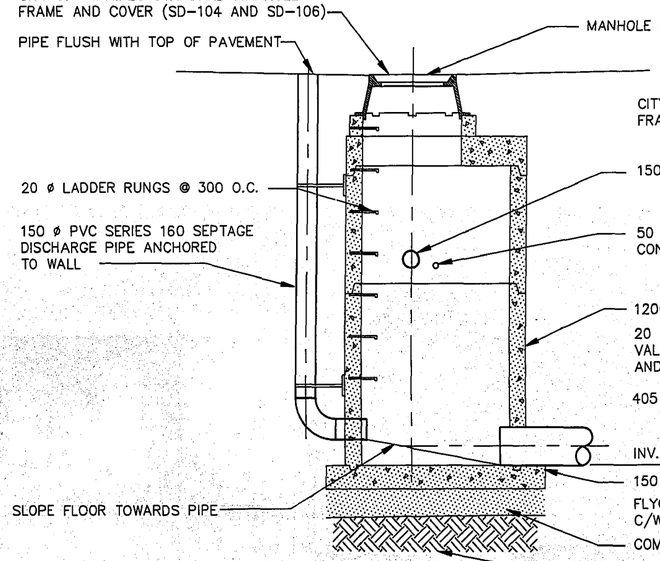

2 M101 M102 RECEIVING MANHOLE SECTION
SCALE 1:25

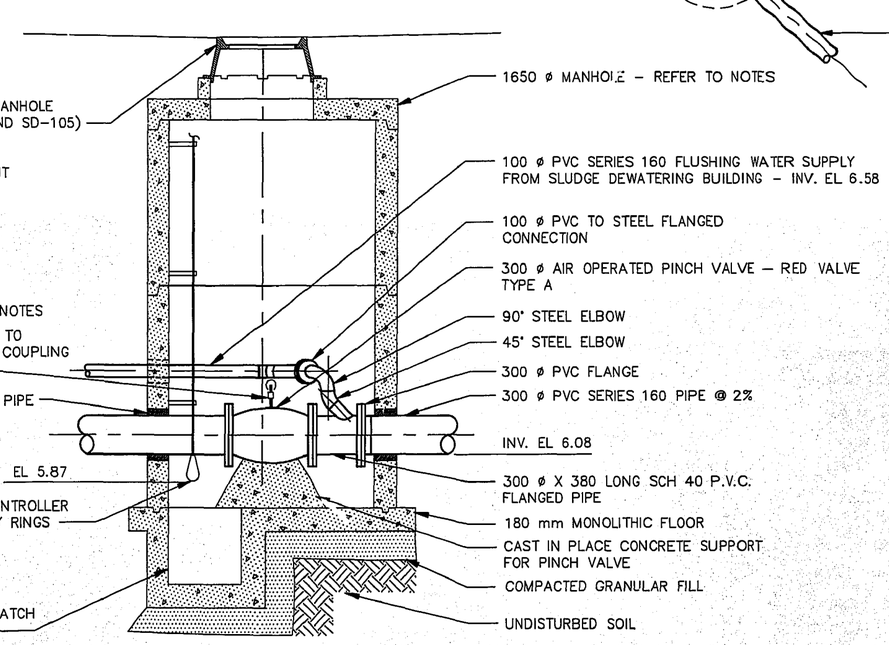

3 M101 M102 CONTROL VALVE MANHOLE SECTION
SCALE 1:25

NOTES:

1. MANHOLES SULPHATE RESISTANT PRECAST CONCRETE C76 CLASS II.
2. ALL GASKETS FOR PRECAST CONCRETE "RAMNECK" OR APPROVED EQUAL.
3. ALL STEEL PIPE COAL TAR EPOXY COATED ON EXTERIOR.
4. 150 ø ODOR CONTROL VENT CONNECTED TO 1500 X 1200 EXHAUST DUCT TO FAN W612-FN LOCATED NEAR COLUMN C2 IN THE SLUDGE DEWATERING BUILDING.

AS CONSTRUCTED
DATE MARCH 1991 BY LOC
APPROVED BY

NO.	REVISIONS	DATE	BY
1.	AS-CONSTRUCTED	MAR91	LOC

B.M. ELEV.

WARDROP ENGINEERING INC.
MacLAREN ENGINEERS INC.
ENGINEERING CONSULTANTS

DESIGNED BY L. C. CHECKED BY
DRAWN BY E. G. /CAD APPROVED BY D. H.
HOR. SCALE: VERTICAL: AS NOTED
DATE OCT 11/89

PROVINCE OF MANITOBA 04/03/91 L. O. CLEVEN REGISTERED PROFESSIONAL ENGINEER
CONSULTANT DRAWING NO. 10024-M102

THE CITY OF WINNIPEG
WORKS AND OPERATIONS DIVISION
WATERWORKS, WASTE & DISPOSAL DEPARTMENT
NORTH END WATER POLLUTION CONTROL CENTER
SEPTAGE FACILITIES – MECHANICAL
PARTIAL SITE PLAN AND DETAILS
CITY DRAWING NUMBER
SHEET OF
NEP 1796